Hitachi Power Tools

LIST NO.E938

ELECTRIC TOOL PARTS LIST

■ COMPOUND SAW

2007・12・1

Model C 12LCH

(E2-4)

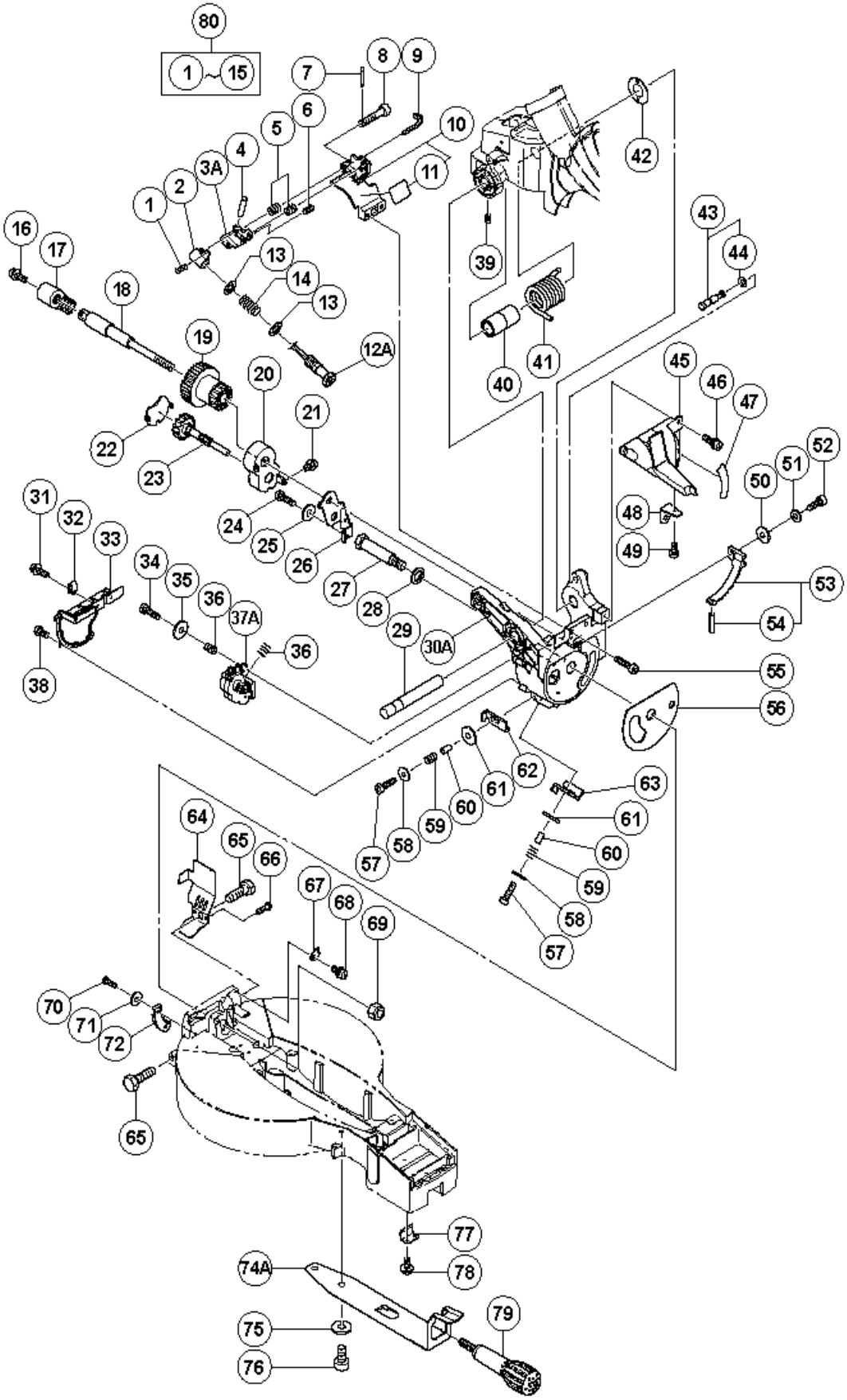

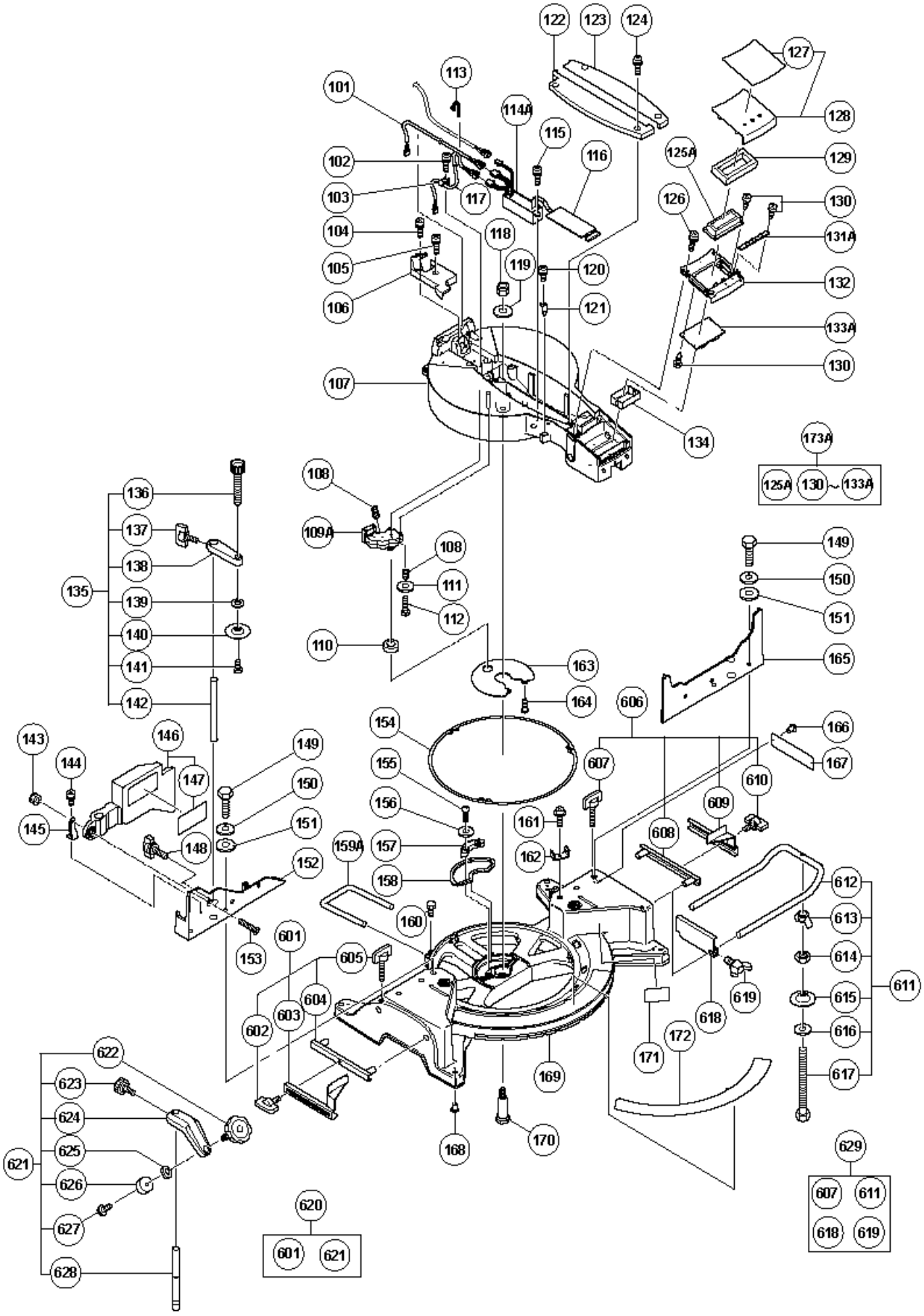
101
102
103
104
105
106
107
108
109A
110
111
112
113
114A
115
116
117
118
119
120
121
122
123
124
125A
126
127
128
129
130
131A
132
133A
134
135
136
137
138
139
140
141
142
143
144
145
146
147
148
149
150
151
152
153
154
155
156
157
158
159A
160
161
162
163
164
165
166
167
168
169
170
171
172
173A
601
602
603
604
605
606
607
608
609
610
611
612
613
614
615
616
617
618
619
620
621
622
623
624
625
626
627
628
629

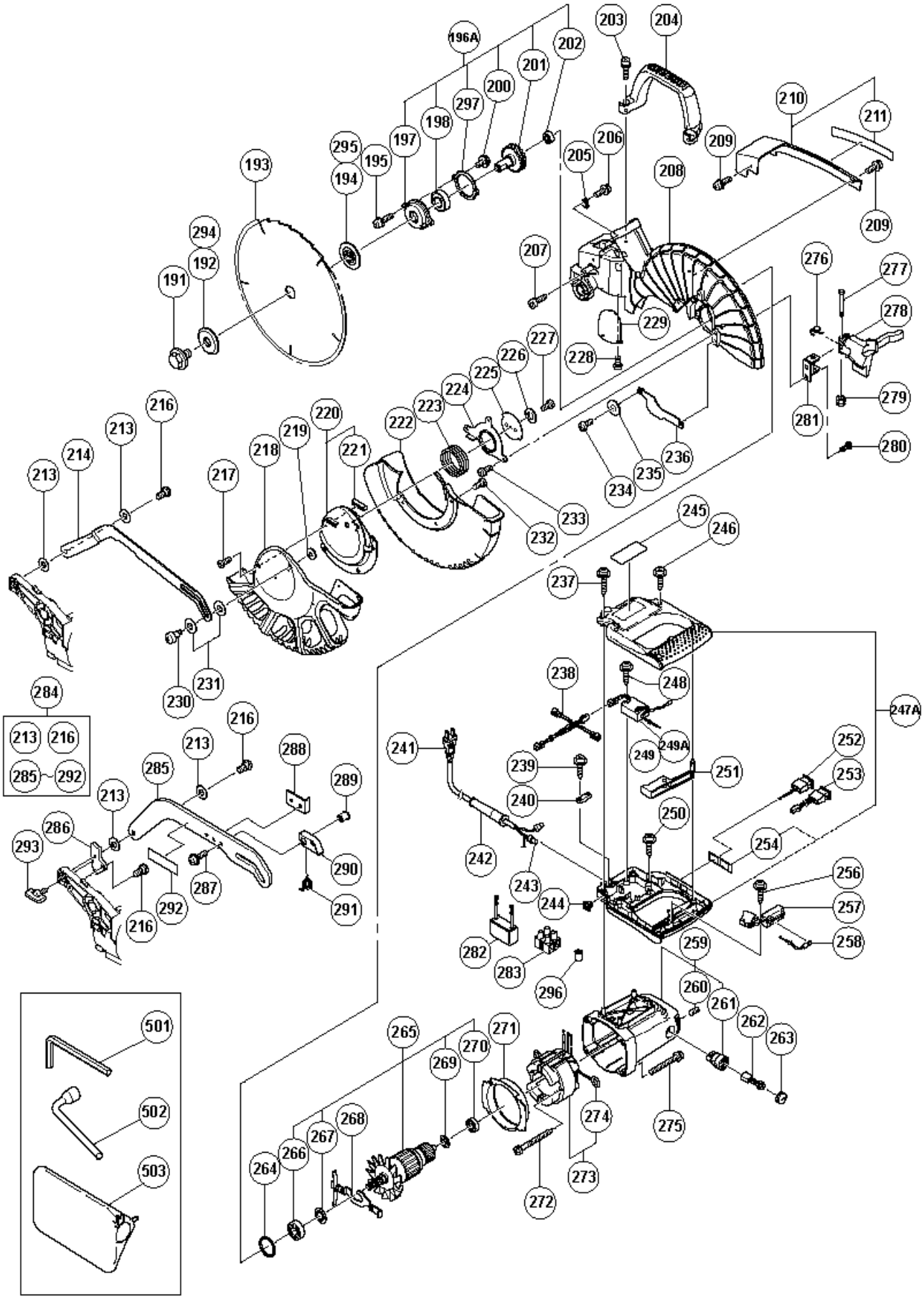
196A
203
204
202
201
200
297
198
197
195
295
194
193
294
192
191
206
205
208
209
210
211
209
207
229
228
227
226
225
224
223
222
220
219
218
221
217
216
213
214
213
233
232
234
235
236
276
277
278
279
281
280
245
246
237
238
248
247A
249
249A
241
239
240
251
252
253
250
254
242
243
244
256
257
258
259
260
261
262
263
282
283
296
284
213
216
285
292
230
231
216
213
288
285
289
213
286
293
290
287
292
291
216
501
502
503
265
271
270
269
268
267
266
264
274
275
273
272

ITEM No.	CODE No.	DESCRIPTION	No. USED	REMARKS
1	323-141	SPRING (B)	1	
2	323-137	LASER HOLDER (A)	1	
3A	328-943	LASER HOLDER (B)	1	
4	949-900	ROLL PIN D3X14 (10 PCS.)	1	
5	323-142	SPRING (C)	2	
6	962-782	HEX. SOCKET SET SCREW M5X6	1	
7	949-531	SPLIT PIN D2X12 (10 PCS.)	1	
8	323-144	SPECIAL BOLT M5	1	
9	975-144	CABLE TIE	1	
10	323-139	LASER BASE ASS'Y	1	INCLUD.11
11		CAUTION LABEL (A)	1	
12A	324-711	LASER MODULE (A)	1	INCLUD.15
13	323-143	WASHER	2	
14	323-140	SPRING (A)	1	
15	323-136	LASER COVER	1	
16	323-208	MACHINE SCREW (W/WASHERS) M6X20 (BLACK)	1	
17	322-935	CLAMP LEVER	1	
18	323-665	BOLT (LEFT HAND) M10	1	
19	323-666	KNOB (A)	1	
20	323-597	GEAR BOX (C)	1	
21	304-043	MACHINE SCREW (W/WASHERS) M4X10 (BLACK)	1	
22	323-598	GEAR BOX (C) COVER	1	
23	323-599	PINION	1	
24	949-821	HEX. SOCKET HD. BOLT M5X16 (10 PCS.)	1	
25	949-454	SPRING WASHER M5 (10 PCS.)	1	
26	323-596	HINGE PLATE	1	
27	322-933	SHAFT (D)	1	
28	322-934	WASHER M16	1	
29	323-593	SHAFT (C)	1	
30A	323-663	HINGE	1	
31	993-539	MACHINE SCREW (W/WASHERS) M4X16	1	
32	980-523	NYLON CLIP	1	
33	323-600	HINGE COVER	1	
34	949-241	MACHINE SCREW M5X20 (10 PCS.)	1	
35	949-432	BOLT WASHER M6 (10 PCS.)	1	
36	323-142	SPRING (C)	2	
37A	323-619	ENCODER	1	
38	949-216	MACHINE SCREW M4X10 (10 PCS.)	4	
39	307-956	SEAL LOCK HEX. SOCKET SET SCREW M6X10	1	
40	323-594	SLEEVE	1	
41	323-595	SPRING (A)	1	

*:ALTERNATIVE PARTS

ITEM No.	CODE No.	DESCRIPTION	No. USED	REMARKS
42	323-684	LINER (D)	1	
43	302-518	STOPPER PIN ASS'Y	1	INCLUD.44
44	984-528	O-RING (P-6)	1	
45	323-601	DUST GUIDE ASS'Y	1	INCLUD.47-49
46	990-541	MACHINE SCREW (W/WASHERS) M5X16	2	
47	323-602	SCALE (B)	1	
48	322-963	DUST GUIDE HOLDER	1	
49	949-214	MACHINE SCREW M4X6 (10 PCS.)	1	
50	949-431	BOLT WASHER M5 (10 PCS.)	1	
51	949-454	SPRING WASHER M5 (10 PCS.)	1	
52	949-821	HEX. SOCKET HD. BOLT M5X16 (10 PCS.)	1	
53	323-664	GEAR (C) ASS'Y	1	INCLUD.54
54	949-900	ROLL PIN D3X14 (10 PCS.)	1	
55	949-660	HEX. SOCKET HD. BOLT M6X20 (10 PCS.)	2	
56	323-683	LINER (B)	1	
57	949-221	MACHINE SCREW M4X20 (10 PCS.)	2	
58	949-423	WASHER M4 (10 PCS.)	2	
59	323-142	SPRING (C)	2	
60	303-006	SPACER D4X10	2	
61	949-432	BOLT WASHER M6 (10 PCS.)	2	
62	323-662	BEVEL PLATE (B)	1	
63	323-661	BEVEL PLATE (A)	1	
64	323-659	COVER (A)	1	
65	303-409	NYLOCK BOLT M8X25	2	
66	935-196	MACHINE SCREW (W/WASHERS) M4X12 (BLACK)	2	
67	322-893	INDICATOR (B)	1	
68	304-043	MACHINE SCREW (W/WASHERS) M4X10 (BLACK)	1	
69	680-418	NYLON NUT M12	1	
70	949-217	MACHINE SCREW M4X12 (10 PCS.)	2	
71	949-423	WASHER M4 (10 PCS.)	2	
72	323-607	GEAR (B)	1	
74A	323-627	SPRING PLATE	1	
75	949-457	SPRING WASHER M8 (10 PCS.)	2	
76	949-655	HEX. SOCKET HD. BOLT M8X16 (10 PCS.)	2	
77	323-609	SPACER (A)	1	
78	307-635	MACHINE SCREW (W/SP. WASHER) M4X10	2	
79	323-680	SIDE HANDLE	1	
80	329-314	LASER HOLDER ASS'Y	1	INCLUD.1-15
101	323-658	CORD (A) LENGTH 380MM	1	
102	993-539	MACHINE SCREW (W/WASHERS) M4X16	1	
103	973-313	NYLON CLIP	1	

*:ALTERNATIVE PARTS

ITEM No.	CODE No.	DESCRIPTION	No. USED	REMARKS
104	304-043	MACHINE SCREW (W/WASHERS) M4X10 (BLACK)	1	
105	993-539	MACHINE SCREW (W/WASHERS) M4X16	1	
106	323-650	CORD COVER	1	
107	323-624	TURN TABLE	1	
108	323-142	SPRING (C)	2	
109A	323-619	ENCODER	1	
110	323-622	PACKING (B)	1	
111	949-432	BOLT WASHER M6 (10 PCS.)	1	
112	949-241	MACHINE SCREW M5X20 (10 PCS.)	1	
113	975-144	CABLE TIE	1	
114A	323-621	CONTROLLER	1	
115	993-539	MACHINE SCREW (W/WASHERS) M4X16	1	
116	323-617	PACKING (C)	1	
117	323-620	CORD (A) LENGTH 160MM	1	
118	975-348	NYLON NUT M8	1	
119	318-929	WASHER (F)	1	
120	304-043	MACHINE SCREW (W/WASHERS) M4X10 (BLACK)	1	
121	318-927	INDICATOR (A)	1	
122	323-648	TABLE INSERT (A)	1	
123	323-649	TABLE INSERT (B)	1	
124	990-541	MACHINE SCREW (W/WASHERS) M5X16	4	
125A	323-612	MONITOR (A)	1	
126	993-539	MACHINE SCREW (W/WASHERS) M4X16	4	
127	323-616	PANEL SHEET (A)	1	
128	323-615	INDICATION PANEL ASS'Y	1	INCLUD.127
129	323-608	PACKING (D)	1	
130	321-672	TAPPING SCREW D2X6	10	
131A	323-613	PRINTED CIRCUIT BOARD (B1)	1	
132	323-611	MONITOR CASE (A)	1	
133A	323-614	PRINTED CIRCUIT BOARD (B2)	1	
134	323-618	INSULATING CASE	1	
135	323-677	VISE ASS'Y	1	INCLUD.136-142
136	323-678	KNOB BOLT	1	
137	301-806	WING BOLT M6X15	1	
138		SCREW HOLDER	1	
139	949-432	BOLT WASHER M6 (10 PCS.)	1	
140	302-532	VISE PLATE	1	
141	949-216	MACHINE SCREW M4X10 (10 PCS.)	1	
142	322-954	VISE SHAFT	1	
143	311-144	NYLON NUT M6	1	
144	304-043	MACHINE SCREW (W/WASHERS) M4X10 (BLACK)	1	

*:ALTERNATIVE PARTS

	ITEM No.	CODE No.	DESCRIPTION	No. USED	REMARKS
	145	323-631	PLATE (C)	1	
	146	323-630	SUB FENCE ASS'Y	1	INCLUD.147
	147		WARNING LABEL (H)	1	
	148	301-806	WING BOLT M6X15	1	
	149	949-678	BOLT M8X35 (10 PCS.)	4	
	150	949-457	SPRING WASHER M8 (10 PCS.)	4	
	151	949-433	BOLT WASHER M8 (10 PCS.)	4	
	152	323-629	FENCE (B)	1	
	153	323-685	FLAT HD. SCREW M6X30	1	
	154	323-625	LINER (A)	3	
	155	302-317	MACHINE SCREW M5X16 (BLACK)	2	
	156	949-431	BOLT WASHER M5 (10 PCS.)	2	
	7 3	23-604 G	EAR (A) 0	1	
	158	323-603	PACKING (A)	1	
	159A	322-910	HOLDER	1	
	160	949-610	BOLT M6X10 (10 PCS.)	1	
	161	987-512	MACHINE SCREW (W/SP. WASHER) M5X16	1	
	162	323-605	HOOK	1	
	163	323-623	DUST COVER	1	
	164	949-215	MACHINE SCREW M4X8 (10 PCS.)	1	
	165	323-628	FENCE (A)	1	
*	166	949-510	RIVET D2.5X4.8 (10 PCS.)	2	FOR USA,CAN,MEX
*	167		WARNING LABEL (A)	1	
	167	000-008D		0	FOR USA,CAN,MEX
	168	323-606	BASE RUBBER	4	
*	169	324-622	BASE ASS'Y	1	INCLUD.168,171,172
*	169	323-655	BASE ASS'Y	1	INCLUD.166-168,171,172 FOR USA,CAN,MEX
	170	323-626	SHAFT (B)	1	
*	171		CAUTION LABEL (D)	1	
*	171		CAUTION LABEL (C)	1	
	171	000-008D		0	FOR USA,CAN,MEX
	172	323-656	SCALE (A)	1	
	173A	323-610	MONITOR ASS'Y	1	INCLUD.125,130-133
	191	988-101	BOLT (A) M10	1	
*	192	323-652	WASHER (B)	1	EXCEPT FOR EUROPE
*	193	323-522	TCT SAW BLADE 305MM-D25.4 HOLE-NT32	1	
*	193	324-268	TCT SAW BLADE 305MM-D30 HOLE-NT32	1	
*	193	324-269	TCT SAW BLADE 305MM-D25.4 HOLE-NT120	1	
*	194	323-651	WASHER (A)	1	EXCEPT FOR EUROPE
	195	323-208	MACHINE SCREW (W/WASHERS) M6X20 (BLACK)	2	
	196A	323-639	SPINDLE ASS'Y	1	(INCLUDE.197,198,200-202,297)

*:ALTERNATIVE PARTS

	ITEM No.	CODE No.	DESCRIPTION	No. USED	REMARKS
	197	323-641	BEARING HOLDER	1	
	198	620-3VV	BALL BEARING 6203VVCMPS2L	1	
	200	304-043	MACHINE SCREW (W/WASHERS) M4X10 (BLACK)	2	
	201	323-640	SPINDLE AND GEAR SET	1	
	202	608-VVM	BALL BEARING 608VVC2PS2L	1	
	203	323-208	MACHINE SCREW (W/WASHERS) M6X20 (BLACK)	2	
	204	322-924	HANDLE	1	
	205	980-523	NYLON CLIP	1	
	206	935-196	MACHINE SCREW (W/WASHERS) M4X12 (BLACK)	1	
	207	949-755	HEX. SOCKET HD. BOLT M6X16 (10 PCS.)	1	
	208	323-638	GEAR CASE	1	
	209	993-539	MACHINE SCREW (W/WASHERS) M4X16	2	
	210	323-653	GEAR CASE COVER ASS'Y	1	INCLUD.211
	211	323-654	CAUTION LABEL (B)	1	FOR POSITION ADJUSTMENT OF LASER LINE
	213	322-948	WASHER M7	2	
*	214	323-674	LINK	1	EXCEPT FOR EUROPE
*	216	322-950	SPECIAL SCREW M6	1	
*	216	322-950	SPECIAL SCREW M6	2	FOR EUROPE,AUS,NZL
	217	318-363	FLAT HD. SCREW M4X10 (BLACK)	1	
	218	323-668	PROTECTIVE COVER (B)	1	
	219	949-454	SPRING WASHER M5 (10 PCS.)	1	
	220	323-672	COVER PLATE (B) ASS'Y	1	INCLUD.221
	221	323-673	CUSHION	1	
	222	323-667	PROTECTIVE COVER (A)	1	
	223	323-671	RETURN SPRING	1	
	224	323-669	COVER PLATE (A)	1	
	225	323-670	COVER WASHER	1	
	226	949-454	SPRING WASHER M5 (10 PCS.)	1	
	227	949-236	MACHINE SCREW M5X10 (10 PCS.)	1	
	228	949-216	MACHINE SCREW M4X10 (10 PCS.)	1	
	229	322-926	LASER COVER (A)	1	
	230	322-947	SPECIAL SCREW (C) M5	1	
	231	322-938	WASHER M10	2	
	232	949-215	MACHINE SCREW M4X8 (10 PCS.)	3	
	233	323-040	MACHINE SCREW M5X10 (BLACK)	3	
*	234	323-040	MACHINE SCREW M5X10 (BLACK)	2	FOR EUROPE,USA,CAN,MEX,AUS
*	235	949-431	BOLT WASHER M5 (10 PCS.)	1	FOR EUROPE,USA,CAN,MEX,AUS
*	236	323-675	SPINDLE COVER	1	FOR EUROPE,USA,CAN,MEX,AUS
	237	307-028	TAPPING SCREW (W/FLANGE) D4X25 (BLACK)	2	
	238	323-632	CORD (B)	1	
	239	984-750	TAPPING SCREW (W/FLANGE) D4X16	2	

*:ALTERNATIVE PARTS

	ITEM No.	CODE No.	DESCRIPTION	No. USED	REMARKS
	240	937-631	CORD CLIP	1	
*	241	500-234Z	CORD	1	(CORD ARMOR D10.7)
*	241	500-435Z	CORD	1	(CORD ARMOR D10.7) FOR GBR (230V)
*	241	500-461Z	CORD	1	(CORD ARMOR D10.7) FOR GBR (110V)
*	241	500-247Z	CORD	1	(CORD ARMOR D10.7) FOR FIN
*	241	500-453Z	CORD	1	(CORD ARMOR D10.7) FOR USA,CAN,MEX
*	241	500-439Z	CORD	1	(CORD ARMOR D10.7) FOR AUS,NZL
*	241	500-456Z	CORD	1	(CORD ARMOR D10.7) FOR CHN
	242	940-778	CORD ARMOR D10.7	1	
*	243	959-141	CONNECTOR 50092 (10 PCS.)	2	FOR USA,CAN,MEX
	244	319-349	CORD BUSH	1	
	245		NAME PLATE	1	
	246	301-653	TAPPING SCREW (W/FLANGE) D4X20 (BLACK)	4	
	247A	324-952	SWITCH HANDLE (C).(D) SET	1	INCLUD.254
	248	984-750	TAPPING SCREW (W/FLANGE) D4X16	1	
*	249	322-911	SWITCHING POWER SUPPLY	1	FOR USA,CAN,MEX
*	249A	323-978	SWITCHING POWER SUPPLY	1	
*	249A	324-322	SWITCHING POWER SUPPLY	1	
	250	301-653	TAPPING SCREW (W/FLANGE) D4X20 (BLACK)	2	
	251	323-645	SWITCH LEVER (A)	1	
	252	323-634	SWITCH (A) (1P TYPE)	1	
	253	323-635	SWITCH (B) (1P TYPE)	1	
	254	323-644	SWITCH LABEL (A)	1	
	256	984-750	TAPPING SCREW (W/FLANGE) D4X16	1	
	257	320-950	SWITCH (1P SCREW TYPE)	1	
*	258	323-983	INTERNAL WIRE (D)	1	
*	258	323-633	INTERNAL WIRE (A)	1	FOR USA,CAN,MEX
	259	322-914	HOUSING ASS'Y	1	INCLUD.260,261
	260	938-477	HEX. SOCKET SET SCREW M5X8	2	
	261	938-241	BRUSH HOLDER	2	
*	262	999-038	CARBON BRUSH (1 PAIR)	2	FOR 110V-120V
*	262	999-065	CARBON BRUSH (1 PAIR)	2	FOR 220V-240V
	263	945-161	BRUSH CAP	2	
	264	303-792	RUBBER RING	1	
*	265	360-684U	ARMATURE ASS'Y 110V-120V	1	INCLUD.266,267,269,270
*	265	360-710E	ARMATURE 220V-230V	1	
*	265	360-710F	ARMATURE 240V	1	
*	265	360-684E	ARMATURE ASS'Y 127V	1	INCLUD.266,267,269,270
	266	620-2VV	BALL BEARING 6202VVCMPS2L	1	
	267	980-700	DUST WASHER (B)	1	
	268	323-637	LOCK LEVER	1	

*:ALTERNATIVE PARTS

	ITEM No.	CODE No.	DESCRIPTION	No. USED	REMARKS
	269	302-428	WASHER (A)	1	
	270	600-0VV	BALL BEARING 6000VVCMPS2L	1	
	271	322-915	FAN GUIDE	1	
	272	953-174	HEX. HD. TAPPING SCREW D5X55	2	
*	273	340-603D	STATOR ASS'Y 110V	1	INCLUD.274
*	273	340-603C	STATOR ASS'Y 120V	1	INCLUD.274
*	273	340-603E	STATOR ASS'Y 220V	1	INCLUD.274
*	273	340-625E	STATOR ASS'Y (B) 230V	1	INCLUD.274
*	273	340-633E	STATOR ASS'Y (C) 230V	1	INCLUD.274 FOR NZL
*	273	340-625F	STATOR ASS'Y (B) 240V	1	INCLUD.274
*	273	340-603F	STATOR ASS'Y 127V	1	INCLUD.274
	274	937-623	BRUSH TERMINAL	2	
	275	322-123	MACHINE SCREW (W/WASHERS) M5X40 (BLACK)	4	
*	276	324-625	LEVER SPRING (A)	1	FOR EUROPE,AUS,NZL
*	277	323-990	LEVER SHAFT	1	FOR EUROPE,AUS,NZL
*	278	324-626	LOCK LEVER (D)	1	FOR EUROPE,AUS,NZL
*	279	877-371	NYLON NUT M5	1	FOR EUROPE,AUS,NZL
*	280	949-236	MACHINE SCREW M5X10 (10 PCS.)	2	FOR EUROPE,AUS,NZL
*	281	324-627	LEVER HOLDER (A)	1	FOR EUROPE,AUS,NZL
*	282	930-039	NOISE SUPPRESSOR	1	FOR EUROPE
*	283	958-308Z	PILLAR TERMINAL (A)	1	EXCEPT FOR USA,CAN
*	284	324-630	LINK (B) ASS'Y	1	INCLUD.213,216,285-292 FOR EUROPE,AUS,
	284	000-008D		0	NZL
*	285	324-631	LINK (B)	1	FOR EUROPE,AUS,NZL
*	286	324-632	LINK (C)	1	FOR EUROPE,AUS,NZL
*	287	935-196	MACHINE SCREW (W/WASHERS) M4X12 (BLACK)	3	FOR EUROPE,AUS,NZL
*	288	323-985	STOP PLATE	1	FOR EUROPE,AUS,NZL
*	289	323-988	RETURN SHAFT	1	FOR EUROPE,AUS,NZL
*	290	323-989	RETURN PLATE	1	FOR EUROPE,AUS,NZL
*	291	323-984	RETURN SPRING (A)	1	FOR EUROPE,AUS,NZL
*	292		CAUTION LABEL (F)	1	
	292	000-008D		0	FOR EUROPE,AUS,NZL
*	293	302-459	WING BOLT M6X17	1	FOR EUROPE,AUS,NZL
*	294	324-633	WASHER (D)	1	FOR EUROPE
*	295	324-634	WASHER (C)	1	FOR EUROPE
*	296	324-518	FERRITE CORE	1	FOR GBR (110V)
	297	326-825	BEARING COVER	1	

*:ALTERNATIVE PARTS

ITEM No.	CODE No.	DESCRIPTION	No. USED	REMARKS
501	944-458	HEX. BAR WRENCH 4MM	1	
502	985-051	BOX WRENCH 17MM	1	
503	322-955	DUST BAG (BLACK)	1	
601	323-546	CROWN MOLDING STOPPER (L) ASS'Y	1	INCLUD.602-605
602	301-806	WING BOLT M6X15	1	
603		CROWN MOLDING STOPPER (L)	1	
604	321-390	CROWN MOLDING STOPPER HOLDER	1	
605	323-682	WING BOLT M6X85	1	
606	323-547	CROWN MOLDING STOPPER (R) ASS'Y	1	INCLUD.607-610
607	323-682	WING BOLT M6X85	2	
608	321-390	CROWN MOLDING STOPPER HOLDER	1	
609		CROWN MOLDING STOPPER (R)	1	
610	301-806	WING BOLT M6X15	1	
611	323-657	HOLDER ASS'Y	1	INCLUD.612-617
612	321-549	HOLDER	1	
613	949-313	WING NUT M6 (10 PCS.)	1	
614	949-556	NUT M6 (10 PCS.)	1	
615	322-047	VISE PLATE	1	
616	949-425	WASHER M6 (10 PCS.)	1	
617	323-681	HIGH TENSION BOLT M6X105	1	
618	974-561	STOPPER	1	
619	949-404	WING BOLT M6X20 (10 PCS.)	1	
620	323-545	CROWN MOLDING VISE ASS'Y	1	INCLUD.601,621
621	322-957	VISE (B) ASS'Y	1	INCLUD.622-628
622	321-551	KNOB BOLT M10X54	1	
623	998-836	KNOB BOLT M6X11	1	
624		SCREW HOLDER (B)	1	
625	306-985	WASHER (H)	1	
626	964-851	BASE RUBBER	1	
627	304-043	MACHINE SCREW (W/WASHERS) M4X10 (BLACK)	1	
628	318-967	VISE SHAFT	1	
629	323-523	GUIDE ASS'Y	1	INCLUD.607,611,618,619
630	305-546	TCT SAW BLADE 305MM-D25.4 HOLE-NT60	1	

*:ALTERNATIVE PARTS